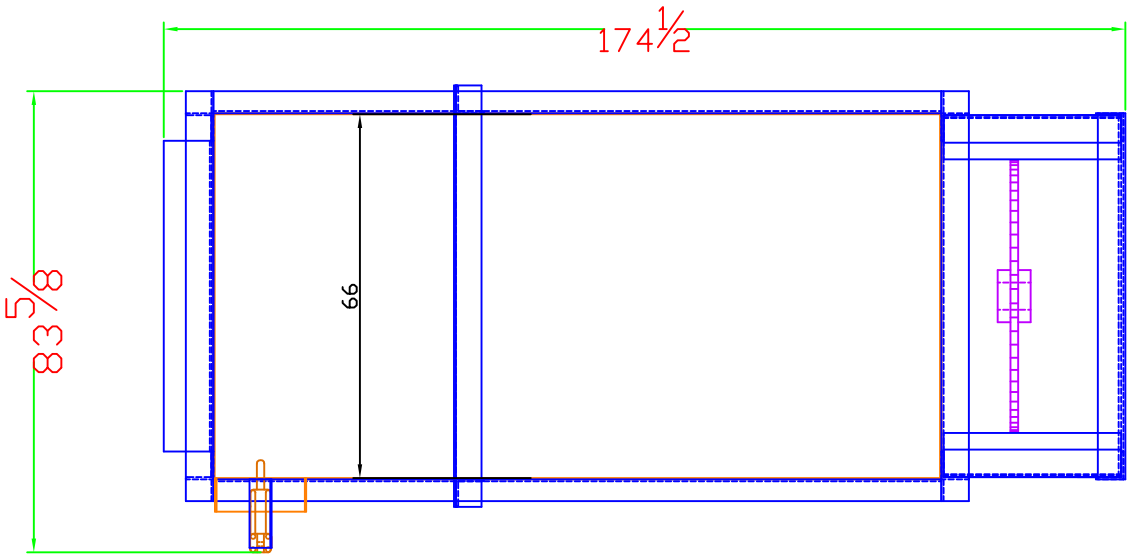

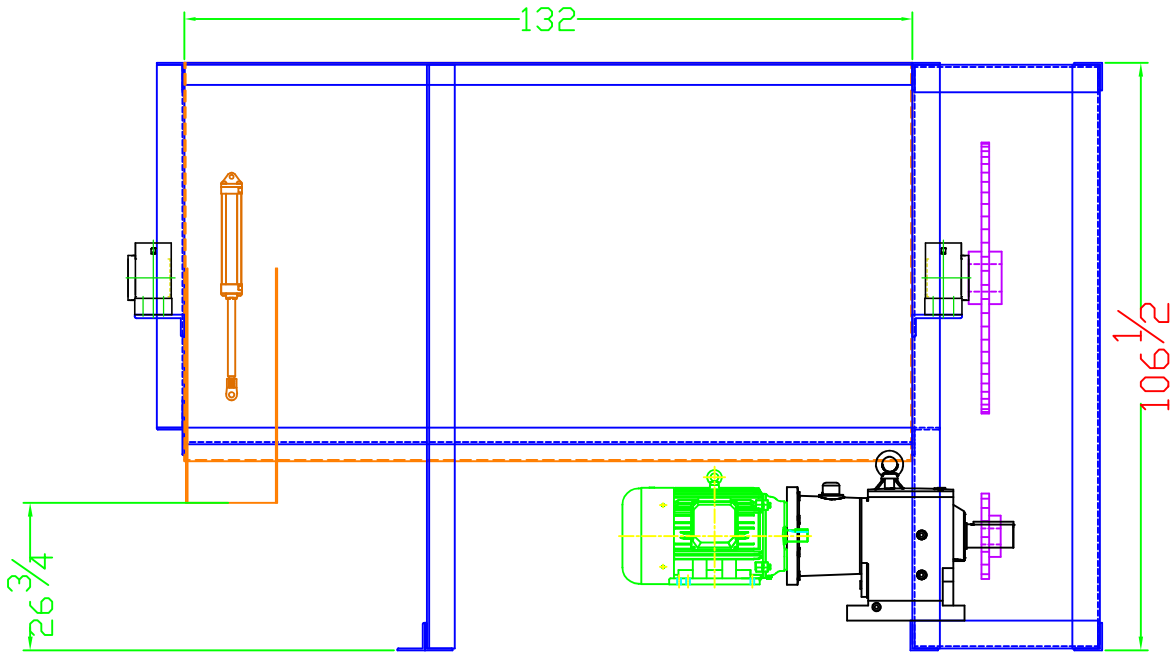

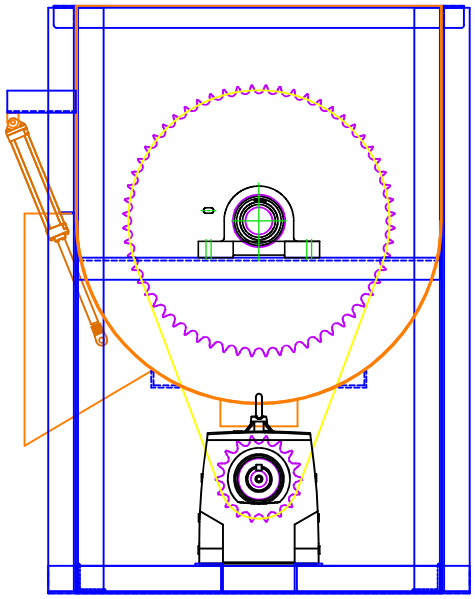

H. C. DAVIS SONS
MANUFACTURING COMPANY, INC.
P.O. BOX 395 BONNER SPRINGS, KS 66012 USA (913) 422 – 3000

CUSTOMER	OUR VALUED CUSTOMER		
DESCRIPTION	HD80 WITH 250 CUBIC FEET		
DATE 02/14/2024	ORDER #	DWG NO. 52–113	REV 0
SCALE NOT TO SCALE	BY JRB	SHEET 1 OF 1	

THIS DRAWING IS THE PROPERTY OF H. C. DAVIS SONS MANUFACTURING CO., INC. AND SHALL NOT BE USED NOR REPRODUCED EITHER WHOLLY OR IN PART EXCEPT WITH WRITTEN AUTHORIZATION. ALL RIGHTS OF DESIGN OR INVENTION ARE RESERVED.